vPolyTan™ Solid Tantalum Surface Mount Chip Capacitors, Molded Case, High Performance Polymer Type

FEATURES

- Ultra-low ESR
- Molded case available in 7 case codes
- Terminations:
  cases J, P: 100 % tin
  case A: 100 % tin or Ni/Pd/Au
  cases T, B, V, D: Ni/Pd/Au
- Compatible with "high volume" automatic pick and place equipment
- Moisture sensitivity level 3
- Material categorization: for definitions of compliance please see www.vishay.com/doc?99912

Pb-free

RoHS COMPLIANT

HALOGEN FREE

GREEN (5-2008)

PERFORMANCE / ELECTRICAL CHARACTERISTICS

Operating Temperature: -55 °C to +105 °C

Capacitance Range: 3.3 µF to 470 µF

Capacitance Tolerance: ± 20 %

Voltage Rating: 2.5 V_{DC} to 35 V_{DC}

APPLICATIONS

- Decoupling, smoothing, filtering
- Bulk energy storage in wireless cards
- Infrastructure equipment
- Storage and networking
- Computer motherboards
- Smartphones and tablets

ORDERING INFORMATION

T55	B	156	M	6R3	C	0500
TYPE	CASE CODE	CAPACITANCE	CAPACITANCE TOLERANCE	DC VOLTAGE RATING	TERMINATION / PACKAGING	ESR
	See Ratings and Case Codes table	This is expressed in picofarads. The first two digits are the significant figures. The third is the number of zeros to follow.	M = ± 20 %	2R5 = 2.5 V 004 = 4 V 6R3 = 6.3 V 010 = 10 V 12R = 12.5 V 016 = 16 V 020 = 20 V 025 = 25 V 035 = 35 V	C = lead (Pb)-free solderable coating, 7" reel	Maximum 100 kHz ESR in mΩ

DIMENSIONS in inches [millimeters]

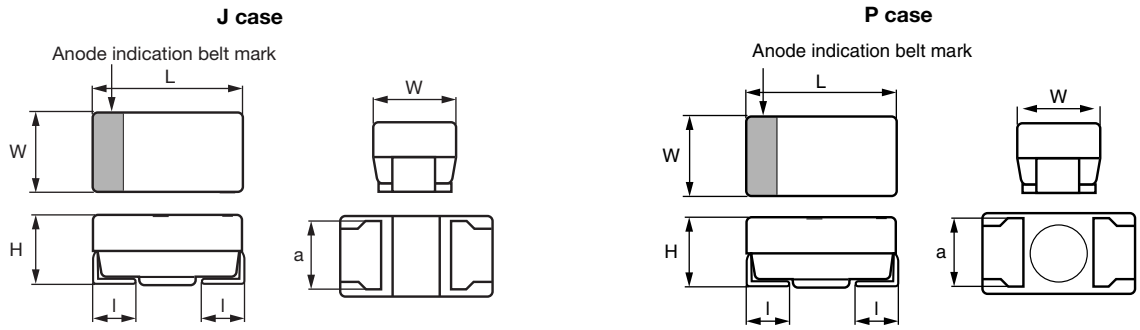

For technical questions, contact: polytech@vishay.com

THIS DOCUMENT IS SUBJECT TO CHANGE WITHOUT NOTICE. THE PRODUCTS DESCRIBED HEREIN AND THIS DOCUMENT ARE SUBJECT TO SPECIFIC DISCLAIMERS, SET FORTH AT www.vishay.com/doc?91000

DIMENSIONS in inches [millimeters]

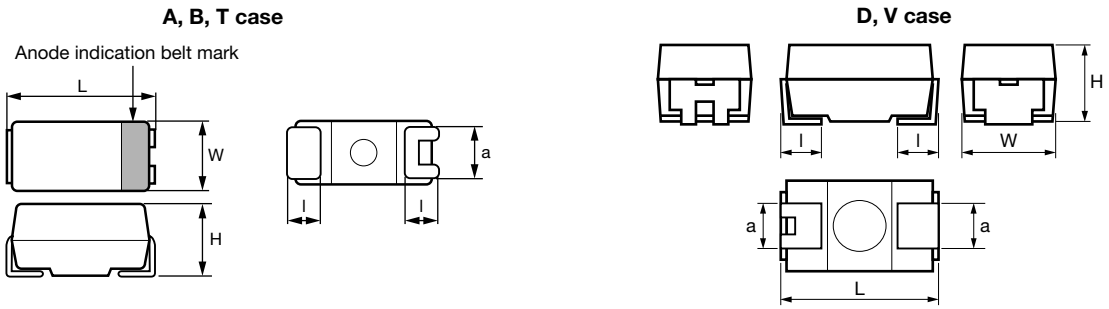

CASE CODE	EIA SIZE	L	W	H	l	a
J	1608-09	0.063 ± 0.004 [1.6 ± 0.1]	0.031 ± 0.004 [0.8 ± 0.1]	0.031 ± 0.004 [0.8 ± 0.1]	0.012 ± 0.006 [0.3 ± 0.15]	0.024 ± 0.004 [0.6 ± 0.1]
P	2012-12	0.080 ± 0.008 [2.0 ± 0.2]	0.049 ± 0.008 [1.25 ± 0.2]	0.047 max. [1.2 max.]	0.020 ± 0.008 [0.5 ± 0.2]	0.035 ± 0.004 [0.9 ± 0.1]
A	3216-18	0.126 ± 0.008 [3.2 ± 0.2]	0.063 ± 0.008 [1.6 ± 0.2]	0.063 ± 0.008 [1.6 ± 0.2]	0.028 ± 0.012 [0.7 ± 0.3]	0.047 ± 0.008 [1.2 ± 0.2]
T	3528-12	0.138 ± 0.008 [3.5 ± 0.2]	0.110 ± 0.008 [2.8 ± 0.2]	0.047 max. [1.2 max.]	0.030 ± 0.012 [0.8 ± 0.3]	0.087 ± 0.008 [2.2 ± 0.2]
B	3528-21	0.138 ± 0.008 [3.5 ± 0.2]	0.110 ± 0.008 [2.8 ± 0.2]	0.075 ± 0.008 [1.9 ± 0.2]	0.030 ± 0.012 [0.8 ± 0.3]	0.087 ± 0.008 [2.2 ± 0.2]
V	7343-20	0.287 ± 0.008 [7.3 ± 0.2]	0.169 ± 0.012 [4.3 ± 0.3]	0.075 ± 0.004 [1.9 ± 0.1]	0.051 ± 0.012 [1.3 ± 0.3]	0.094 ± 0.008 [2.4 ± 0.2]
D	7343-30	0.287 ± 0.008 [7.3 ± 0.2]	0.169 ± 0.012 [4.3 ± 0.3]	0.110 ± 0.008 [2.8 ± 0.2]	0.051 ± 0.012 [1.3 ± 0.3]	0.094 ± 0.008 [2.4 ± 0.2]

RATINGS AND CASE CODES

µF	2.5 V	4.0 V	6.3 V	10 V	12.5 V	16 V	20 V	25 V	35 V
3.3			J / P	J / P					
4.7			J / P / A	P / A					
6.8			P / A	A		B		B	B
10		J / P / A	P / A	A		B		B	
15		P / A	A	A	T [(1)]	B	B	B [(1)]	
22	A	A / B	A / T / B	A / T / B		B			
33	A	A / B	A / T / B	A / T / B					
47	A	A / T / B	A / T / B	B					
68	A / B	A / T / B	T / B	V					
100	A / T / B	A / T / B	A / T / B	D		V			
150	B	B / V	B / V	V					
220	B / V	B / V / D	B / V / D	V [(1)] / D					
330	B / V	D / V	V / D	D					
470	B / D	D	V [(1)] / D						

Note

[(1)] In development.

For technical questions, contact: polytech@vishay.com
THIS DOCUMENT IS SUBJECT TO CHANGE WITHOUT NOTICE. THE PRODUCTS DESCRIBED HEREIN AND THIS DOCUMENT ARE SUBJECT TO SPECIFIC DISCLAIMERS, SET FORTH AT www.vishay.com/doc?91000

MARKING

A case

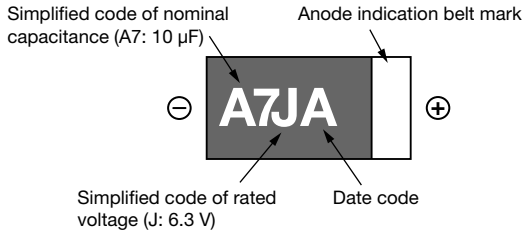

T, B, V, D case

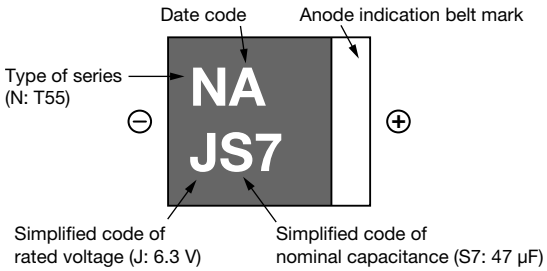

VOLTAGE CODE		CAPACITANCE CODE	
V	CODE	CAP, µF	CODE
2.5	e	3.3	N6
4	G	4.7	S6
6.3	J	6.8	W6
10	A	10	A7
12.5	B	15	E7
16	C	22	J7
20	D	33	N7
25	E	47	S7
35	V	68	W7
		100	A8
		150	E8
		220	J8
		330	N8
		470	S8

J, P case

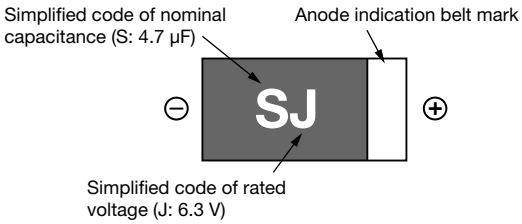

RATED VOLTAGE	CAPACITANCE	MARKING
4	10	AG
4	15	EG
6.3	3.3	NJ
6.3	4.7	SJ
6.3	6.8	WJ
6.3	10	AJ
10	3.3	NA
10	4.7	SA

DATE CODE

YEAR	MONTH											
	1	2	3	4	5	6	7	8	9	10	11	12
2013	A	B	C	D	E	F	G	H	J	K	L	M
2014	N	P	Q	R	S	T	U	V	W	X	Y	Z
2015	a	b	c	d	e	f	g	h	j	k	l	m
2016	n	p	q	r	s	t	u	v	w	x	y	z

For technical questions, contact: polytech@vishay.com
THIS DOCUMENT IS SUBJECT TO CHANGE WITHOUT NOTICE. THE PRODUCTS DESCRIBED HEREIN AND THIS DOCUMENT ARE SUBJECT TO SPECIFIC DISCLAIMERS, SET FORTH AT www.vishay.com/doc?91000

STANDARD RATINGS

CAPACITANCE (µF)	CASE CODE	PART NUMBER	MAX. DCL AT 25 °C (µA)	MAX. DF AT 25 °C 120 Hz (%)	MAX. ESR AT + 25 °C 100 kHz (mΩ)	MAX. RIPPLE, AT 45 °C 100 kHz I_{RMS} (A)
2.5 V_{DC} AT +105 °C						
22	A	T55A226M2R5C0200	5.5	10	200	0.75
22	A	T55A226M2R5C0180	5.5	10	180	0.79
33	A	T55A336M2R5C0200	8.2	10	200	0.75
33	A	T55A336M2R5C0180	8.2	10	180	0.79
47	A	T55A476M2R5C0200	11.7	10	200	0.75
47	A	T55A476M2R5C0180	11.7	10	180	0.79
68	A	T55A686M2R5C0250	17.0	10	250	0.67
68	A	T55A686M2R5C0200	17.0	10	200	0.75
68	B	T55B686M2R5C0070	17.0	8	70	1.36
100	A	T55A107M2R5C0200	25.0	10	200	0.75
100	A	T55A107M2R5C0100	25.0	10	100	1.07
100	T	T55T107M2R5C0070	25.0	10	70	1.22
100	B	T55B107M2R5C0070	25.0	8	70	1.36
100	B	T55B107M2R5C0055	25.0	8	55	1.53
150	B	T55B157M2R5C0070	37.5	8	70	1.36
150	B	T55B157M2R5C0055	37.5	8	55	1.53
220	B	T55B227M2R5C0070	55.0	8	70	1.36
220	B	T55B227M2R5C0055	55.0	8	55	1.53
220	B	T55B227M2R5C0045	55.0	8	45	1.69
220	B	T55B227M2R5C0035	55.0	8	35	1.93
220	B	T55B227M2R5C0030	55.0	8	30	2.08
220	V	T55V227M2R5C0025	55.0	10	25	2.73
220	V [(1)]	T55V227M2R5C0018	55.0	10	18	3.22
220	V [(1)]	T55V227M2R5C0015	55.0	10	15	3.53
330	B	T55B337M2R5C0070	82.5	8	70	1.36
330	B	T55B337M2R5C0045	82.5	8	45	1.70
330	B	T55B337M2R5C0035	82.5	8	35	1.93
330	B	T55B337M2R5C0025	82.5	8	25	2.28
330	V	T55V337M2R5C0040	82.5	10	40	2.16
330	V	T55V337M2R5C0025	82.5	10	25	2.73
330	V [(1)]	T55V337M2R5C0018	82.5	10	18	3.22
330	V [(1)]	T55V337M2R5C0015	82.5	10	15	3.53
470	B	T55B477M2R5C0025	117.5	8	25	2.28
470	D	T55D477M2R5C0050	117.5	10	50	2.12
470	D	T55D477M2R5C0040	117.5	10	40	2.37
470	D	T55D477M2R5C0025	117.5	10	25	3.00
4 V_{DC} AT +105 °C						
10	J	T55J106M004C0500	10.0	10	500	0.32
10	P	T55P106M004C0500	5.0	10	500	0.36
10	P	T55P106M004C0300	5.0	10	300	0.46
10	P	T55P106M004C0200	5.0	10	200	0.56
10	A	T55A106M004C0500	4.0	10	500	0.48
10	A	T55A106M004C0200	4.0	10	200	0.76
15	P	T55P156M004C0500	10.0	10	500	0.36
15	P	T55P156M004C0200	10.0	10	200	0.56
15	A	T55A156M004C0500	6.0	10	500	0.48
15	A	T55A156M004C0300	6.0	10	300	0.61
15	A	T55A156M004C0200	6.0	10	200	0.76

Notes

- Termination code "C": cases J, P: 100 % tin, case A: 100 % tin or Ni/Pd/Au, cases T, B, V, D: Ni/Pd/Au.

(1) In development.

For technical questions, contact: polytech@vishay.com
THIS DOCUMENT IS SUBJECT TO CHANGE WITHOUT NOTICE. THE PRODUCTS DESCRIBED HEREIN AND THIS DOCUMENT ARE SUBJECT TO SPECIFIC DISCLAIMERS, SET FORTH AT www.vishay.com/doc?91000

STANDARD RATINGS

CAPACITANCE (µF)	CASE CODE	PART NUMBER	MAX. DCL AT 25 °C (µA)	MAX. DF AT 25 °C 120 Hz (%)	MAX. ESR AT + 25 °C 100 kHz (mΩ)	MAX. RIPPLE, AT 45 °C 100 kHz I_{RMS} (A)
		4 V_{DC} AT +105 °C				
22	A	T55A226M004C0500	8.8	10	500	0.48
22	A	T55A226M004C0300	8.8	10	300	0.61
22	A	T55A226M004C0200	8.8	10	200	0.76
22	B	T55B226M004C0150	8.8	8	150	0.93
22	B	T55B226M004C0200	8.8	8	200	0.81
33	A	T55A336M004C0500	13.2	10	500	0.48
33	A	T55A336M004C0300	13.2	10	300	0.61
33	A	T55A336M004C0200	13.2	10	200	0.76
33	B	T55B336M004C0200	13.2	8	200	0.81
47	A	T55A476M004C0500	18.8	10	500	0.48
47	A	T55A476M004C0200	18.8	10	200	0.76
47	A	T55A476M004C0180	18.8	10	180	0.79
47	T	T55T476M004C0200	18.8	10	200	0.72
47	T	T55T476M004C0080	18.8	10	80	1.15
47	T	T55T476M004C0070	18.8	10	70	1.22
47	B	T55B476M004C0150	18.8	8	150	0.93
47	B	T55B476M004C0070	18.8	8	70	1.36
68	A	T55A686M004C0500	27.2	10	500	0.48
68	A	T55A686M004C0250	27.2	10	250	0.67
68	A	T55A686M004C0200	27.2	10	200	0.76
68	T	T55T686M004C0200	27.2	10	200	0.72
68	T	T55T686M004C0180	27.2	10	180	0.76
68	T	T55T686M004C0080	27.2	10	80	1.15
68	T	T55T686M004C0070	27.2	10	70	1.22
68	B	T55B686M004C0150	27.2	8	150	0.93
68	B	T55B686M004C0070	27.2	8	70	1.36
100	A	T55A107M004C0200	40.0	10	200	0.75
100	A	T55A107M004C0100	40.0	10	100	1.07
100	T	T55T107M004C0150	40.0	10	150	0.84
100	T	T55T107M004C0070	40.0	10	70	1.22
100	B	T55B107M004C0070	40.0	8	70	1.36
100	B	T55B107M004C0055	40.0	8	55	1.53
100	B	T55B107M004C0045	40.0	8	45	1.70
100	B	T55B107M004C0040	40.0	8	40	1.80
100	B	T55B107M004C0035	40.0	8	35	1.92
150	B	T55B157M004C0070	60.0	8	70	1.36
150	B	T55B157M004C0055	60.0	8	55	1.53
150	B	T55B157M004C0045	60.0	8	45	1.69
150	B	T55B157M004C0040	60.0	8	40	1.80
150	B	T55B157M004C0035	60.0	8	35	1.93
150	V	T55V157M004C0045	60.0	10	45	2.03
150	V	T55V157M004C0025	60.0	10	25	2.73
220	B	T55B227M004C0070	88.0	8	70	1.36
220	B	T55B227M004C0060	88.0	8	60	1.47
220	B	T55B227M004C0055	88.0	8	55	1.53
220	B	T55B227M004C0045	88.0	8	45	1.70
220	B	T55B227M004C0035	88.0	8	35	1.93
220	V	T55V227M004C0055	88.0	10	55	1.84
220	V	T55V227M004C0045	88.0	10	45	2.03
220	V	T55V227M004C0040	88.0	10	40	2.16
220	V	T55V227M004C0035	88.0	10	35	2.31
220	V	T55V227M004C0025	88.0	10	25	2.73
220	V	T55V227M004C0018	88.0	10	18	3.22
220	V	T55V227M004C0015	88.0	10	15	3.53
220	D	T55D227M004C0055	88.0	10	55	2.02
220	D	T55D227M004C0040	88.0	10	40	2.37
220	D	T55D227M004C0025	88.0	10	25	3.00

Notes

- Termination code “C”: cases J, P: 100 % tin, case A: 100 % tin or Ni/Pd/Au, cases T, B, V, D: Ni/Pd/Au.

(1) In development.

For technical questions, contact: polytech@vishay.com
THIS DOCUMENT IS SUBJECT TO CHANGE WITHOUT NOTICE. THE PRODUCTS DESCRIBED HEREIN AND THIS DOCUMENT ARE SUBJECT TO SPECIFIC DISCLAIMERS, SET FORTH AT www.vishay.com/doc?91000

STANDARD RATINGS

CAPACITANCE (µF)	CASE CODE	PART NUMBER	MAX. DCL AT 25 °C (µA)	MAX. DF AT 25 °C 120 Hz (%)	MAX. ESR AT + 25 °C 100 kHz (mΩ)	MAX. RIPPLE, AT 45 °C 100 kHz I_{RMS} (A)
4 V_{DC} AT +105 °C						
330	V	T55V337M004C0050	132.0	10	50	1.93
330	V	T55V337M004C0045	132.0	10	45	2.03
330	V	T55V337M004C0040	132.0	10	40	2.16
330	V	T55V337M004C0025	132.0	10	25	2.73
330	V	T55V337M004C0018	132.0	10	18	3.22
330	V	T55V337M004C0015	132.0	10	15	3.53
330	D	T55D337M004C0050	132.0	10	50	2.12
330	D	T55D337M004C0040	132.0	10	40	2.37
330	D	T55D337M004C0025	132.0	10	25	3.00
330	D	T55D337M004C0015	132.0	10	15	3.87
470	D	T55D477M004C0055	188.0	10	55	2.02
470	D	T55D477M004C0050	188.0	10	50	2.12
470	D	T55D477M004C0040	188.0	10	40	2.37
470	D	T55D477M004C0025	188.0	10	25	3.00
470	D	T55D477M004C0018	188.0	10	18	3.53
6.3 V_{DC} AT +105 °C						
3.3	J	T55J335M6R3C0500	10.0	10	500	0.32
3.3	P	T55P335M6R3C0500	5.0	10	500	0.36
4.7	J	T55J475M6R3C0500	10.0	10	500	0.32
4.7	P	T55P475M6R3C0500	5.0	10	500	0.36
4.7	A	T55A475M6R3C0500	3.0	10	500	0.48
6.8	P	T55P685M6R3C0500	5.0	10	500	0.36
6.8	A	T55A685M6R3C0500	4.2	10	500	0.48
10	P	T55P106M6R3C0500	10.0	10	500	0.36
10	P	T55P106M6R3C0200	10.0	10	200	0.56
10	A	T55A106M6R3C0500	6.3	10	500	0.48
10	A	T55A106M6R3C0300	6.3	10	300	0.61
10	A	T55A106M6R3C0200	6.3	10	200	0.76
15	A	T55A156M6R3C0500	9.4	10	500	0.48
15	A	T55A156M6R3C0300	9.4	10	300	0.61
15	A	T55A156M6R3C0200	9.4	10	200	0.76
22	A	T55A226M6R3C0500	13.8	10	500	0.48
22	A	T55A226M6R3C0300	13.8	10	300	0.61
22	A	T55A226M6R3C0200	13.8	10	200	0.76
22	T	T55T226M6R3C0150	13.8	10	150	0.84
22	T	T55T226M6R3C0070	13.8	10	70	1.22
22	B	T55B226M6R3C0150	13.8	8	150	0.93
33	A	T55A336M6R3C0500	20.7	10	500	0.48
33	A	T55A336M6R3C0200	20.7	10	200	0.76
33	A	T55A336M6R3C0180	20.7	10	180	0.79
33	T	T55T336M6R3C0200	20.7	10	200	0.72
33	T	T55T336M6R3C0150	20.7	10	150	0.84
33	T	T55T336M6R3C0070	20.7	10	70	1.22
33	B	T55B336M6R3C0200	20.7	8	200	0.81
33	B	T55B336M6R3C0150	20.7	8	150	0.93
33	B	T55B336M6R3C0080	20.7	8	80	1.27
33	B	T55B336M6R3C0070	20.7	8	70	1.36
33	B	T55B336M6R3C0040	20.7	8	40	1.80

Notes

- Termination code “C”: cases J, P: 100 % tin, case A: 100 % tin or Ni/Pd/Au, cases T, B, V, D: Ni/Pd/Au.

(1) In development.

For technical questions, contact: polytech@vishay.com
THIS DOCUMENT IS SUBJECT TO CHANGE WITHOUT NOTICE. THE PRODUCTS DESCRIBED HEREIN AND THIS DOCUMENT ARE SUBJECT TO SPECIFIC DISCLAIMERS, SET FORTH AT www.vishay.com/doc?91000

STANDARD RATINGS

CAPACITANCE (µF)	CASE CODE	PART NUMBER	MAX. DCL AT 25 °C (µA)	MAX. DF AT 25 °C 120 Hz (%)	MAX. ESR AT + 25 °C 100 kHz (mΩ)	MAX. RIPPLE, AT 45 °C 100 kHz I_{RMS} (A)
		6.3 V_{DC} AT +105 °C				
47	A	T55A476M6R3C0500	29.6	10	500	0.48
47	A	T55A476M6R3C0200	29.6	10	200	0.76
47	A	T55A476M6R3C0180	29.6	10	180	0.79
47	A	T55A476M6R3C0150	29.6	10	150	0.88
47	A	T55A476M6R3C0100	29.6	10	100	1.07
47	A	T55A476M6R3C0070	29.6	10	70	1.28
47	T	T55T476M6R3C0200	29.6	10	200	0.72
47	T	T55T476M6R3C0120	29.6	10	120	0.93
47	T	T55T476M6R3C0080	29.6	10	80	1.15
47	T	T55T476M6R3C0070	29.6	10	70	1.22
47	B	T55B476M6R3C0150	29.6	8	150	0.93
47	B	T55B476M6R3C0070	29.6	8	70	1.36
47	B	T55B476M6R3C0060	29.6	8	60	1.47
47	B	T55B476M6R3C0040	29.6	8	40	1.80
68	T	T55T686M6R3C0200	42.8	10	200	0.72
68	T	T55T686M6R3C0150	42.8	10	150	0.83
68	T	T55T686M6R3C0070	42.8	10	70	1.22
68	B	T55B686M6R3C0150	42.8	8	150	0.93
68	B	T55B686M6R3C0070	42.8	8	70	1.36
100	A	T55A107M6R3C0200	63.0	10	200	0.76
100	A	T55A107M6R3C0150	63.0	10	150	0.88
100	A	T55A107M6R3C0100	63.0	10	100	1.07
100	A	T55A107M6R3C0070	63.0	10	70	1.28
100	T	T55T107M6R3C0200	63.0	10	200	0.72
100	T	T55T107M6R3C0070	63.0	10	70	1.22
100	B	T55B107M6R3C0100	63.0	8	100	1.14
100	B	T55B107M6R3C0070	63.0	8	70	1.36
100	B	T55B107M6R3C0055	63.0	8	55	1.53
100	B	T55B107M6R3C0045	63.0	8	45	1.70
100	B	T55B107M6R3C0040	63.0	8	40	1.80
100	B	T55B107M6R3C0035	63.0	8	35	1.93
150	B	T55B157M6R3C0100	94.5	8	100	1.14
150	B	T55B157M6R3C0070	94.5	8	70	1.36
150	B	T55B157M6R3C0055	94.5	8	55	1.53
150	B	T55B157M6R3C0045	94.5	8	45	1.70
150	B	T55B157M6R3C0040	94.5	8	40	1.80
150	B	T55B157M6R3C0035	94.5	8	35	1.93
150	B [(1)]	T55B157M6R3C0025	94.5	8	25	2.28
150	V	T55V157M6R3C0055	94.5	10	55	1.84
150	V	T55V157M6R3C0045	94.5	10	45	2.03
150	V	T55V157M6R3C0040	94.5	10	40	2.16
150	V	T55V157M6R3C0035	94.5	10	35	2.31
150	V	T55V157M6R3C0025	94.5	10	25	2.73

Notes

- Termination code “C”: cases J, P: 100 % tin, case A: 100 % tin or Ni/Pd/Au, cases T, B, V, D: Ni/Pd/Au.

(1) In development.

For technical questions, contact: polytech@vishay.com
THIS DOCUMENT IS SUBJECT TO CHANGE WITHOUT NOTICE. THE PRODUCTS DESCRIBED HEREIN AND THIS DOCUMENT ARE SUBJECT TO SPECIFIC DISCLAIMERS, SET FORTH AT www.vishay.com/doc?91000

STANDARD RATINGS

CAPACITANCE (µF)	CASE CODE	PART NUMBER	MAX. DCL AT 25 °C (µA)	MAX. DF AT 25 °C 120 Hz (%)	MAX. ESR AT + 25 °C 100 kHz (mΩ)	MAX. RIPPLE, AT 45 °C 100 kHz I_{RMS} (A)
6.3 V_{DC} AT +105 °C						
220	B	T55B227M6R3C0200	138.6	8	200	0.80
220	B	T55B227M6R3C0070	138.6	8	70	1.36
220	B	T55B227M6R3C0045	138.6	8	45	1.69
220	B	T55B227M6R3C0035	138.6	8	35	1.93
220	B	T55B227M6R3C0025	138.6	8	25	2.28
220	V	T55V227M6R3C0050	138.6	10	50	1.93
220	V	T55V227M6R3C0045	138.6	10	45	2.03
220	V	T55V227M6R3C0040	138.6	10	40	2.16
220	V	T55V227M6R3C0035	138.6	10	35	2.31
220	V	T55V227M6R3C0025	138.6	10	25	2.73
220	V	T55V227M6R3C0018	138.6	10	18	3.22
220	V	T55V227M6R3C0015	138.6	10	15	3.53
220	D	T55D227M6R3C0055	138.6	10	55	2.02
220	D	T55D227M6R3C0050	138.6	10	50	2.12
220	D	T55D227M6R3C0040	138.6	10	40	2.37
220	D	T55D227M6R3C0035	138.6	10	35	2.53
220	D	T55D227M6R3C0025	138.6	10	25	3.00
330	V	T55V337M6R3C0050	207.9	10	50	1.93
330	V	T55V337M6R3C0045	207.9	10	45	2.03
330	V	T55V337M6R3C0040	207.9	10	40	2.16
330	V	T55V337M6R3C0025	207.9	10	25	2.73
330	V	T55V337M6R3C0018	207.9	10	18	3.22
330	V	T55V337M6R3C0015	207.9	10	15	3.53
330	D	T55D337M6R3C0055	207.9	10	55	2.02
330	D	T55D337M6R3C0050	207.9	10	50	2.12
330	D	T55D337M6R3C0045	207.9	10	45	2.23
330	D	T55D337M6R3C0040	207.9	10	40	2.37
330	D	T55D337M6R3C0025	207.9	10	25	3.00
330	D	T55D337M6R3C0018	207.9	10	18	3.53
330	D	T55D337M6R3C0015	207.9	10	15	3.87
330	D	T55D337M6R3C0012	207.9	10	12	4.33
470	V [(1)]	T55V477M6R3C0055	296.1	10	55	1.84
470	V [(1)]	T55V477M6R3C0050	296.1	10	50	1.93
470	D	T55D477M6R3C0030	296.1	10	30	2.73
470	D	T55D477M6R3C0025	296.1	10	25	3.00
470	D	T55D477M6R3C0015	296.1	10	15	3.87
10 V_{DC} AT +105 °C						
3.3	J	T55J335M010C0500	10.0	10	500	0.32
3.3	P	T55P335M010C0500	5.0	10	500	0.36
4.7	P	T55P475M010C0500	10.0	10	500	0.36
4.7	P	T55P475M010C0200	10.0	10	200	0.56
4.7	A	T55A475M010C0500	4.7	10	500	0.48
4.7	A	T55A475M010C0300	4.7	10	300	0.61
4.7	A	T55A475M010C0200	4.7	10	200	0.76
6.8	A	T55A685M010C0500	6.8	10	500	0.48
6.8	A	T55A685M010C0300	6.8	10	300	0.61
6.8	A	T55A685M010C0200	6.8	10	200	0.76

Notes

- Termination code “C”: cases J, P: 100 % tin, case A: 100 % tin or Ni/Pd/Au, cases T, B, V, D: Ni/Pd/Au.

(1) In development.

For technical questions, contact: polytech@vishay.com
THIS DOCUMENT IS SUBJECT TO CHANGE WITHOUT NOTICE. THE PRODUCTS DESCRIBED HEREIN AND THIS DOCUMENT ARE SUBJECT TO SPECIFIC DISCLAIMERS, SET FORTH AT www.vishay.com/doc?91000

STANDARD RATINGS

CAPACITANCE (µF)	CASE CODE	PART NUMBER	MAX. DCL AT 25 °C (µA)	MAX. DF AT 25 °C 120 Hz (%)	MAX. ESR AT + 25 °C 100 kHz (mΩ)	MAX. RIPPLE, AT 45 °C 100 kHz I_{RMS} (A)
		10 V_{DC} AT +105 °C				
10	A	T55A106M010C0500	10.0	10	500	0.48
10	A	T55A106M010C0300	10.0	10	300	0.61
10	A	T55A106M010C0200	10.0	10	200	0.76
15	A	T55A156M010C0500	15.0	10	500	0.48
15	A	T55A156M010C0200	15.0	10	200	0.76
22	A	T55A226M010C0500	22.0	10	500	0.48
22	A	T55A226M010C0200	22.0	10	200	0.76
22	T	T55T226M010C0200	22.0	10	200	0.72
22	T	T55T226M010C0150	22.0	10	150	0.84
22	T	T55T226M010C0070	22.0	10	70	1.22
22	B	T55B226M010C0300	22.0	8	300	0.66
22	B	T55B226M010C0200	22.0	8	200	0.81
22	B	T55B226M010C0150	22.0	8	150	0.93
22	B	T55B226M010C0070	22.0	8	70	1.36
33	A	T55A336M010C0500	33.0	10	500	0.48
33	A	T55A336M010C0150	33.0	10	150	0.88
33	A	T55A336M010C0070	33.0	10	70	1.28
33	A	T55A336M010C0200	33.0	10	200	0.76
33	T	T55T336M010C0200	33.0	10	200	0.72
33	T	T55T336M010C0150	33.0	10	150	0.84
33	T	T55T336M010C0080	33.0	10	80	1.14
33	T	T55T336M010C0070	33.0	10	70	1.22
33	T [(1)]	T55T336M010C0040	33.0	8	40	1.62
33	B	T55B336M010C0200	33.0	8	200	0.81
33	B	T55B336M010C0150	33.0	8	150	0.93
33	B	T55B336M010C0080	33.0	8	80	1.27
33	B	T55B336M010C0070	33.0	8	70	1.36
47	B	T55B476M010C0150	47.0	8	150	0.93
47	B	T55B476M010C0070	47.0	8	70	1.36
68	V	T55V686M010C0100	68.0	10	100	1.36
68	V	T55V686M010C0060	68.0	10	60	1.76
100	D	T55D107M010C0080	100.0	10	80	1.67
100	D	T55D107M010C0055	100.0	10	55	2.02
100	D	T55D107M010C0045	100.0	10	45	2.23
100	D	T55D107M010C0025	100.0	10	25	3.00
100	D [(1)]	T55D107M010C0018	100.0	10	18	3.53
150	V	T55V157M010C0055	150.0	10	55	1.84
150	V	T55V157M010C0045	150.0	10	45	2.03
150	V	T55V157M010C0040	150.0	10	40	2.16
150	V	T55V157M010C0025	150.0	10	25	2.73
150	V	T55V157M010C0015	150.0	10	15	3.53
220	V [(1)]	T55V227M010C0050	220.0	10	50	1.93
220	V [(1)]	T55V227M010C0045	220.0	10	45	2.03
220	V [(1)]	T55V227M010C0040	220.0	10	40	2.16
220	V [(1)]	T55V227M010C0025	220.0	10	25	2.73
220	V [(1)]	T55V227M010C0018	220.0	10	18	3.22
220	D	T55D227M010C0055	220.0	10	55	2.02
220	D	T55D227M010C0050	220.0	10	50	2.12
220	D	T55D227M010C0040	220.0	10	40	2.37
220	D	T55D227M010C0025	220.0	10	25	3.00
220	D [(1)]	T55D227M010C0018	220.0	10	18	3.53
330	D	T55D337M010C0040	330.0	10	40	2.37
330	D	T55D337M010C0035	330.0	10	35	2.53
330	D	T55D337M010C0025	330.0	10	25	3.00

Notes

- Termination code “C”: cases J, P: 100 % tin, case A: 100 % tin or Ni/Pd/Au, cases T, B, V, D: Ni/Pd/Au.

(1) In development.

For technical questions, contact: polytech@vishay.com
THIS DOCUMENT IS SUBJECT TO CHANGE WITHOUT NOTICE. THE PRODUCTS DESCRIBED HEREIN AND THIS DOCUMENT ARE SUBJECT TO SPECIFIC DISCLAIMERS, SET FORTH AT www.vishay.com/doc?91000

STANDARD RATINGS

CAPACITANCE (µF)	CASE CODE	PART NUMBER	MAX. DCL AT 25 °C (µA)	MAX. DF AT 25 °C 120 Hz (%)	MAX. ESR AT + 25 °C 100 kHz (mΩ)	MAX. RIPPLE, AT 45 °C 100 kHz I_{RMS} (A)
12.5 V_{DC} AT +105 °C						
15	T [(1)]	T55T156M12RC0080	18.7	8	80	1.14
16 V_{DC} AT +105 °C						
6.8	B	T55B685M016C0200	10.8	8	200	0.80
10	B	T55B106M016C0200	16.0	8	200	0.80
10	B	T55B106M016C0100	16.0	8	100	1.14
15	B	T55B156M016C0150	24.0	8	150	0.93
15	B	T55B156M016C0090	24.0	8	90	1.20
22	B	T55B226M016C0150	35.2	8	150	0.93
22	B	T55B226M016C0070	35.2	8	70	1.36
100	V	T55V107M016C0050	160.0	10	50	1.93
20 V_{DC} AT +105 °C						
15	B	T55B156M020C0090	30.0	8	90	1.20
15	B	T55B156M020C0070	30.0	8	70	1.36
25 V_{DC} AT +105 °C						
6.8	B	T55B685M025C0100	17.0	8	100	1.14
10	B	T55B106M025C0150	25.0	8	150	0.93
10	B	T55B106M025C0100	25.0	8	100	1.14
15	B [(1)]	T55B156M025C0100	37.5	8	100	1.14
35 V_{DC} AT +105 °C						
6.8	B	T55B685M035C0200	23.8	8	200	0.81

Notes

- Termination code "C": cases J, P: 100 % tin, case A: 100 % tin or Ni/Pd/Au, cases T, B, V, D: Ni/Pd/Au.

(1) In development.

RECOMMENDED VOLTAGE DERATING GUIDELINES

CAPACITOR VOLTAGE RATING	OPERATING VOLTAGE
2.5	2.3
4.0	3.6
6.3	5.7
10	9.0
12.5	11.2
16	12.8
20	16
25	20
35	28

POWER DISSIPATION

CASE CODE	MAXIMUM PERMISSIBLE POWER DISSIPATION (W) AT ≤ +45 °C IN FREE AIR
J	0.050
P	0.064
A	0.115
T	0.105
B	0.130
V	0.187
D	0.225

THIS DOCUMENT IS SUBJECT TO CHANGE WITHOUT NOTICE. THE PRODUCTS DESCRIBED HEREIN AND THIS DOCUMENT ARE SUBJECT TO SPECIFIC DISCLAIMERS, SET FORTH AT www.vishay.com/doc?91000

STANDARD PACKAGING QUANTITY

CASE CODE	UNITS PER 7" REEL
J	4000
P	3000
A	2000
T	3000
B	2000
V	800
D	500

PERFORMANCE CHARACTERISTICS

ITEM	CONDITION	POST TEST PERFORMANCE			
Temperature characteristics	Measure the specified characteristics in each stage		Specified initial value	-55 °C	+105 °C
		Capacitance change	-	-20 % to 0 %	0 % to 30 %
		Dissipation factor shown in Standard Ratings table or less	8 to 10	14	-
		Leakage current	Refer to Standard Ratings table	-	Not more than 1 CV or 30 μA which is greater
Surge voltage	105 °C, 1000 successive test cycles in series with a 1 kΩ resistor at the rate of 30 s ON, 30 s OFF; test voltage per table below:	Capacitance change	Within ± 20 % of initial value		
	Rated voltage: 2.5, 4, 6.3, 10, 12.5, 16, 20, 25, 35	Dissipation factor	Within initial limit		
	Surge voltage: 3.2, 5.2, 8.2, 13, 16, 20, 23, 29, 40	Leakage current	Shall not exceed 300 % of initial limit		
Solder heat resistance	Reflow board surface peak temperature: less than 260 °C Time: 5 s max.	Capacitance change	Within ± 20 % of initial value		
		Dissipation factor	Initial specified value or less		
		Leakage current	Shall not exceed 300 % of initial specified value		
Moisture resistance no load	Leave at 60 °C and 90 % RH for 500 h	Capacitance change	$V_R \leq 4$ V	Relative to the value before test +50 % to -20 %	
			$V_R \geq 6.3$ V	Relative to the value before test +40 % to -20 %	
		Dissipation factor	Initial specified value or less		
		Leakage current	Shall not exceed 300 % of initial specified value		
High temperature load	105 °C. The rated voltage is applied through a protective resistor of 3 Ω for 1000 h	Capacitance change	Within ± 20 % of initial value		
		Dissipation factor	Initial specified value or less		
		Leakage current	Shall not exceed 300 % of initial specified value		
Thermal shock	Leave at -55 °C, normal temperature, 105 °C, and normal temperature for 30 min., 15 min. 30 min., and 15 min. Repeat this operation 5 times running.	Capacitance change	Within ± 20 % of initial value or less		
		Dissipation factor	Initial specified value or less		
		Leakage current	Shall not exceed 300 % of initial specified value		
Failure rate	105 °C. The rated voltage is applied through a protective resistor of 1 Ω/V.	1 % / 1000 h			

Note

- Test conditions per JIS C5101-1

For technical questions, contact: polytech@vishay.com
THIS DOCUMENT IS SUBJECT TO CHANGE WITHOUT NOTICE. THE PRODUCTS DESCRIBED HEREIN AND THIS DOCUMENT ARE SUBJECT TO SPECIFIC DISCLAIMERS, SET FORTH AT www.vishay.com/doc?91000

Guide for Tantalum Solid Electrolyte Chip Capacitors with Polymer Cathode

INTRODUCTION

Tantalum electrolytic capacitors are the preferred choice in applications where volumetric efficiency, stable electrical parameters, high reliability, and long service life are primary considerations. The stability and resistance to elevated temperatures of the tantalum/tantalum oxide/manganese dioxide system make solid tantalum capacitors an appropriate choice for today's surface mount assembly technology.

Vishay Sprague has been a pioneer and leader in this field, producing a large variety of tantalum capacitor types for consumer, industrial, automotive, military, and aerospace electronic applications.

Tantalum is not found in its pure state. Rather, it is commonly found in a number of oxide minerals, often in combination with Columbium ore. This combination is known as “tantalite” when its contents are more than one-half tantalum. Important sources of tantalite include Australia, Brazil, Canada, China, and several African countries. Synthetic tantalite concentrates produced from tin slags in Thailand, Malaysia, and Brazil are also a significant raw material for tantalum production.

Electronic applications, and particularly capacitors, consume the largest share of world tantalum production. Other important applications for tantalum include cutting tools (tantalum carbide), high temperature super alloys, chemical processing equipment, medical implants, and military ordnance.

Vishay Sprague is a major user of tantalum materials in the form of powder and wire for capacitor elements and rod and sheet for high temperature vacuum processing.

THE BASICS OF TANTALUM CAPACITORS

Most metals form crystalline oxides which are non-protecting, such as rust on iron or black oxide on copper. A few metals form dense, stable, tightly adhering, electrically insulating oxides. These are the so-called “valve“metals and include titanium, zirconium, niobium, tantalum, hafnium, and aluminum. Only a few of these permit the accurate control of oxide thickness by electrochemical means. Of these, the most valuable for the electronics industry are aluminum and tantalum.

Capacitors are basic to all kinds of electrical equipment, from radios and television sets to missile controls and automobile ignitions. Their function is to store an electrical charge for later use.

Capacitors consist of two conducting surfaces, usually metal plates, whose function is to conduct electricity. They are separated by an insulating material or dielectric. The dielectric used in all tantalum electrolytic capacitors is tantalum pentoxide.

Tantalum pentoxide compound possesses high-dielectric strength and a high-dielectric constant. As capacitors are being manufactured, a film of tantalum pentoxide is applied to their electrodes by means of an electrolytic process. The film is applied in various thicknesses and at various voltages and although transparent to begin with, it takes on different colors as light refracts through it. This coloring occurs on the tantalum electrodes of all types of tantalum capacitors.

Rating for rating, tantalum capacitors tend to have as much as three times better capacitance/volume efficiency than aluminum electrolytic capacitors. An approximation of the capacitance/volume efficiency of other types of capacitors may be inferred from the following table, which shows the dielectric constant ranges of the various materials used in each type. Note that tantalum pentoxide has a dielectric constant of 26, some three times greater than that of aluminum oxide. This, in addition to the fact that extremely thin films can be deposited during the electrolytic process mentioned earlier, makes the tantalum capacitor extremely efficient with respect to the number of microfarads available per unit volume. The capacitance of any capacitor is determined by the surface area of the two conducting plates, the distance between the plates, and the dielectric constant of the insulating material between the plates.

COMPARISON OF CAPACITOR DIELECTRIC CONSTANTS

DIELECTRIC	e DIELECTRIC CONSTANT
Air or vacuum	1.0
Paper	2.0 to 6.0
Plastic	2.1 to 6.0
Mineral oil	2.2 to 2.3
Silicone oil	2.7 to 2.8
Quartz	3.8 to 4.4
Glass	4.8 to 8.0
Porcelain	5.1 to 5.9
Mica	5.4 to 8.7
Aluminum oxide	8.4
Tantalum pentoxide	**26**
Ceramic	12 to 400K

In the tantalum electrolytic capacitor, the distance between the plates is very small since it is only the thickness of the tantalum pentoxide film. As the dielectric constant of the tantalum pentoxide is high, the capacitance of a tantalum capacitor is high if the area of the plates is large:

$$C = \frac{eA}{t}$$

where

C = capacitance

e = dielectric constant

A = surface area of the dielectric

t = thickness of the dielectric

Tantalum capacitors contain either liquid or solid electrolytes. In solid electrolyte capacitors, a dry material (manganese dioxide) forms the cathode plate. A tantalum lead is embedded in or welded to the pellet, which is in turn connected to a termination or lead wire. The drawings show the construction details of the surface mount types of tantalum capacitors shown in this catalog.

For technical questions, contact: polytech@vishay.com
THIS DOCUMENT IS SUBJECT TO CHANGE WITHOUT NOTICE. THE PRODUCTS DESCRIBED HEREIN AND THIS DOCUMENT ARE SUBJECT TO SPECIFIC DISCLAIMERS, SET FORTH AT www.vishay.com/doc?91000

SOLID ELECTROLYTE POLYMER TANTALUM CAPACITORS

Solid electrolyte polymer capacitors utilize sintered tantalum pellets as anodes. Tantalum pentoxide dielectric layer is formed on the entire surface of anode, which is further impregnated with highly conductive polymer as cathode system.

The conductive polymer layer is then coated with graphite, followed by a layer of metallic silver, which provides a conductive surface between the capacitor element and the outer termination (lead frame or other).

Molded chip polymer tantalum capacitor encases the element in plastic resins, such as epoxy materials. After assembly, the capacitors are tested and inspected to assure long life and reliability. It offers excellent reliability and high stability for variety of applications in electronic devices. Usage of conductive polymer cathode system provides very low equivalent series resistance (ESR), which makes the capacitors particularly suitable for high frequency applications.

TANTALUM CAPACITOR WITH POLYMER CATHODE TYPE T55

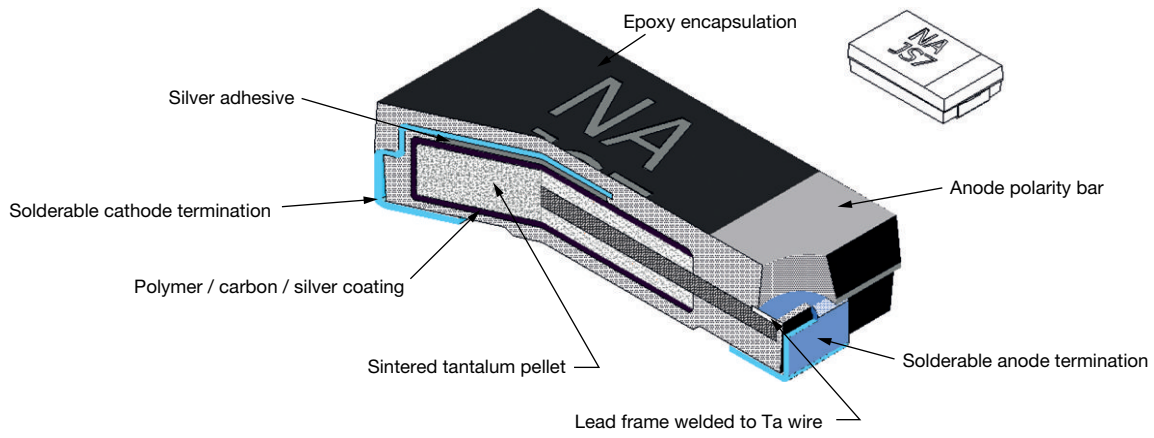

TANTALUM CAPACITOR WITH POLYMER CATHODE TYPE T58

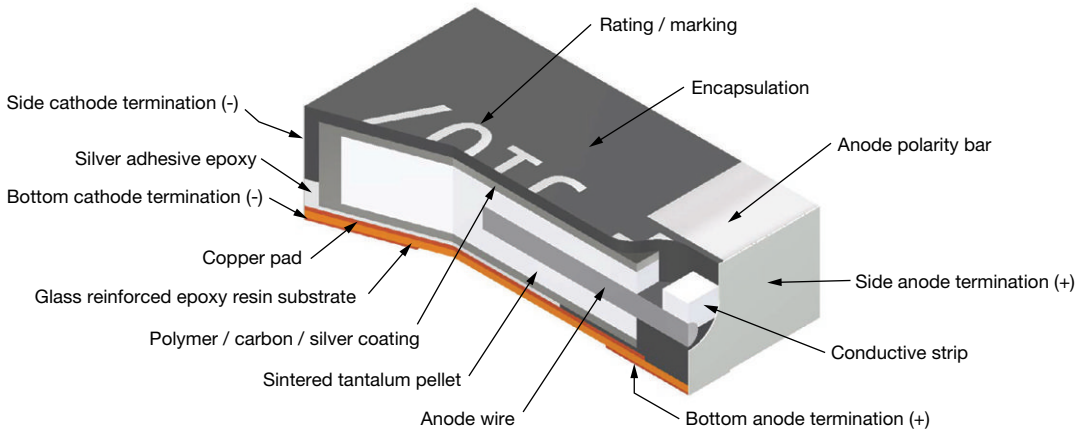

For technical questions, contact: polytech@vishay.com
THIS DOCUMENT IS SUBJECT TO CHANGE WITHOUT NOTICE. THE PRODUCTS DESCRIBED HEREIN AND THIS DOCUMENT ARE SUBJECT TO SPECIFIC DISCLAIMERS, SET FORTH AT www.vishay.com/doc?91000

TANTALUM CAPACITOR WITH POLYMER CATHODE TYPE T52

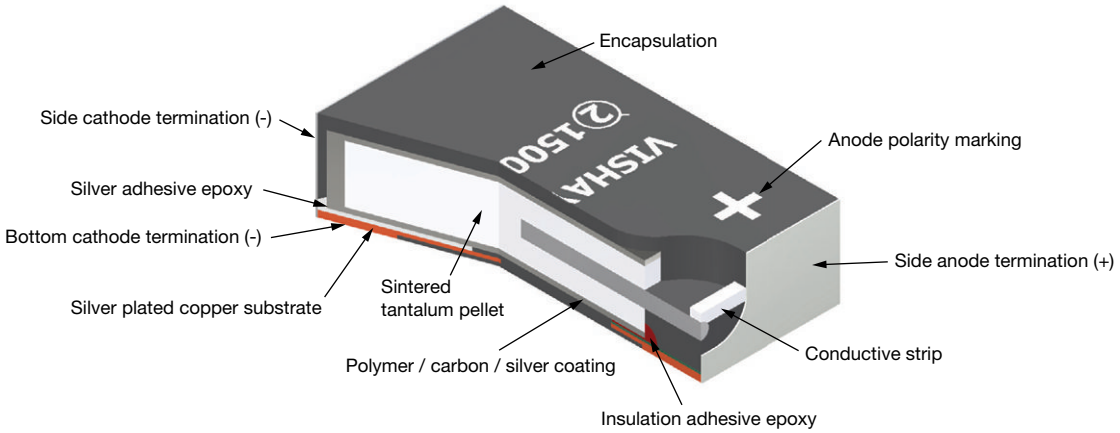

TANTALUM CAPACITOR WITH POLYMER CATHODE TYPE T54 / T59

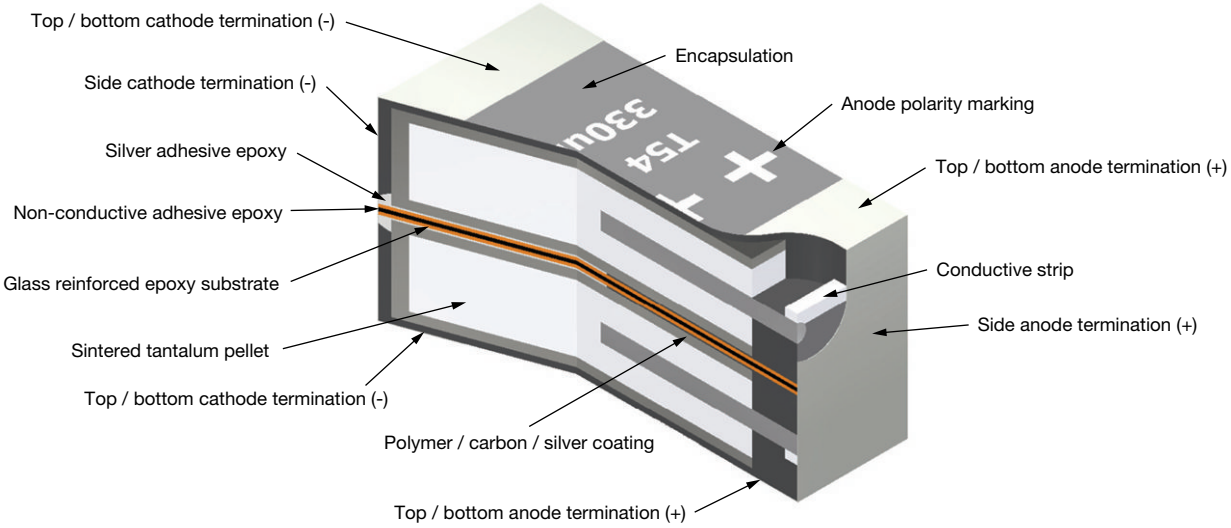

For technical questions, contact: polytech@vishay.com
THIS DOCUMENT IS SUBJECT TO CHANGE WITHOUT NOTICE. THE PRODUCTS DESCRIBED HEREIN AND THIS DOCUMENT ARE SUBJECT TO SPECIFIC DISCLAIMERS, SET FORTH AT www.vishay.com/doc?91000

SOLID TANTALUM CAPACITORS - MOLDED CASE	
SERIES	**T55**
PRODUCT IMAGE	
TYPE	VPolyTan™, molded case, high performance polymer
FEATURES	High performance
TEMPERATURE RANGE	-55 °C to +105 °C
CAPACITANCE RANGE	3.3 µF to 470 µF
VOLTAGE RANGE	2.5 V to 35 V
CAPACITANCE TOLERANCE	± 20 %
LEAKAGE CURRENT	0.1 CV
DISSIPATION FACTOR	8 % to 10 %
ESR	15 mΩ to 500 mΩ
CASE SIZES	J, P, A, T, B, V, D
TERMINATION FINISH	Cases J, P: 100 % tin Case A: 100 % tin or Ni/Pd/Au Cases T, B, V, D: Ni/Pd/Au

SOLID TANTALUM CAPACITORS - LEADFRAMELESS MOLDED CASE				
SERIES	**T52**	**T58**	**T59**	**T54**
PRODUCT IMAGE		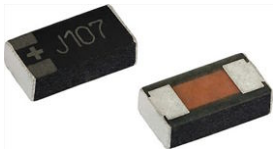		
TYPE	vPolyTan™ solid tantalum surface mount chip capacitors, leadframeless molded polymer type	vPolyTan™ solid tantalum surface mount chip capacitors, leadframeless molded polymer type	vPolyTan™ solid tantalum surface mount chip capacitors, leadframeless molded polymer type	vPolyTan™ solid tantalum surface mount chip capacitors, leadframeless molded polymer type, commercial off-the-shelf (COTS)
FEATURES	Low profile	Small case size	Multianode	Hi-rel COTS, multianode
TEMPERATURE RANGE	-55 °C to +105 °C (above 85 °C, voltage derating is required)	-55 °C to +105 °C (above 85 °C, voltage derating is required)	-55 °C to +105 °C (above 85 °C, voltage derating is required)	-55 °C to +105 °C (above 85 °C, voltage derating is required)
CAPACITANCE RANGE	330 µF to 2200 µF	10 µF to 330 µF	10 µF to 470 µF	10 µF to 470 µF
VOLTAGE RANGE	6.3 V to 16 V	4 V to 25 V	16 V to 75 V	16 V to 75 V
CAPACITANCE TOLERANCE	± 10 %, ± 20 %	± 20 %	± 10 %, ± 20 %	± 20 %
LEAKAGE CURRENT	0.1 CV			
DISSIPATION FACTOR	10 %	8 % to 14 %	10 %	10 %
ESR	25 mΩ to 55 mΩ	90 mΩ to 500 mΩ	25 mΩ to 100 mΩ	25 mΩ to 100 mΩ
CASE SIZES	E1, M1	MM, M0, W0, W9, A0, AA, B0, BB	EE	EE
TERMINATION	100 % tin			100 % tin / lead

For technical questions, contact: polytech@vishay.com
THIS DOCUMENT IS SUBJECT TO CHANGE WITHOUT NOTICE. THE PRODUCTS DESCRIBED HEREIN AND THIS DOCUMENT ARE SUBJECT TO SPECIFIC DISCLAIMERS, SET FORTH AT www.vishay.com/doc?91000

MOLDED CAPACITORS, T55 TYPE

PLASTIC TAPE AND REEL PACKAGING DIMENSIONS in millimeters

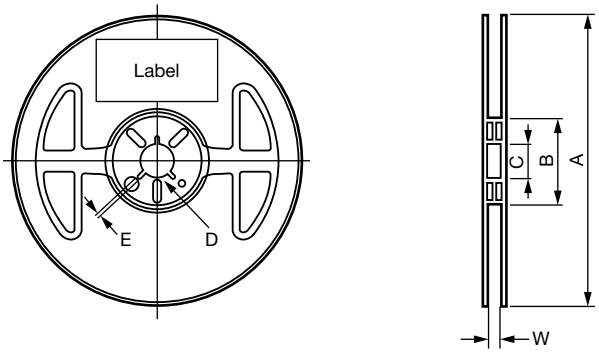

TAPE WIDTH	8	12
A + 0 / - 3	Ø 180	
B + 1 / 0	Ø 60	
C ± 0.2	Ø 13	
D ± 0.5	Ø 21	
E ± 0.5	2.0	
W ± 0.3	9.0	13.0

Note

- A reel diameter of 330 mm is also applicable.

PLASTIC TAPE SIZE DIMENSIONS in millimeters

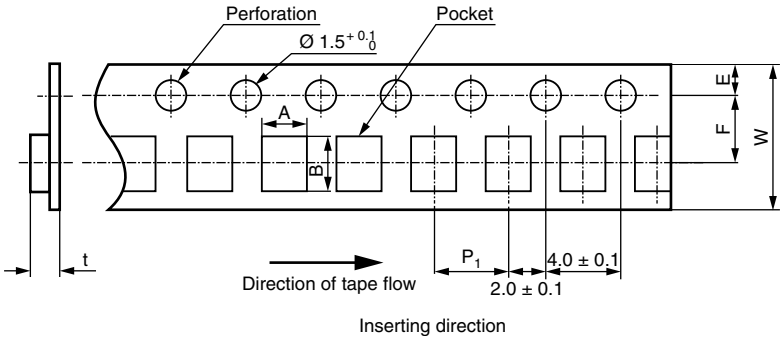

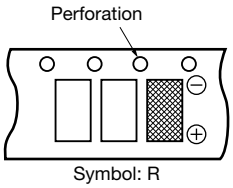

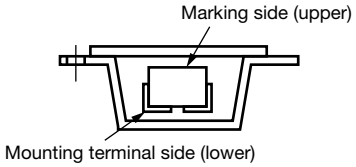

CASE CODE	A ± 0.2	B ± 0.2	W ± 0.3	F ± 0.1	E ± 0.1	P_1 ± 0.1	$t_{max.}$
J	1.0	1.8	8.0	3.5	1.75	4.0	1.3
P	1.4	2.2	8.0	3.5	1.75	4.0	1.6
A	1.9	3.5	8.0	3.5	1.75	4.0	2.5
T	3.1	3.8	8.0	3.5	1.75	4.0	1.7
B	3.1	3.8	8.0	3.5	1.75	4.0	2.5
V	4.8	7.7	12.0	5.5	1.75	8.0	2.6
D	4.8	7.7	12.0	5.5	1.75	8.0	3.4

Note

- A reel diameter of 330 mm is also applicable.

For technical questions, contact: polytech@vishay.com
THIS DOCUMENT IS SUBJECT TO CHANGE WITHOUT NOTICE. THE PRODUCTS DESCRIBED HEREIN AND THIS DOCUMENT ARE SUBJECT TO SPECIFIC DISCLAIMERS, SET FORTH AT www.vishay.com/doc?91000

LEADFRAMELESS MOLDED CAPACITORS, ALL TYPES

PLASTIC TAPE AND REEL PACKAGING in inches [millimeters]

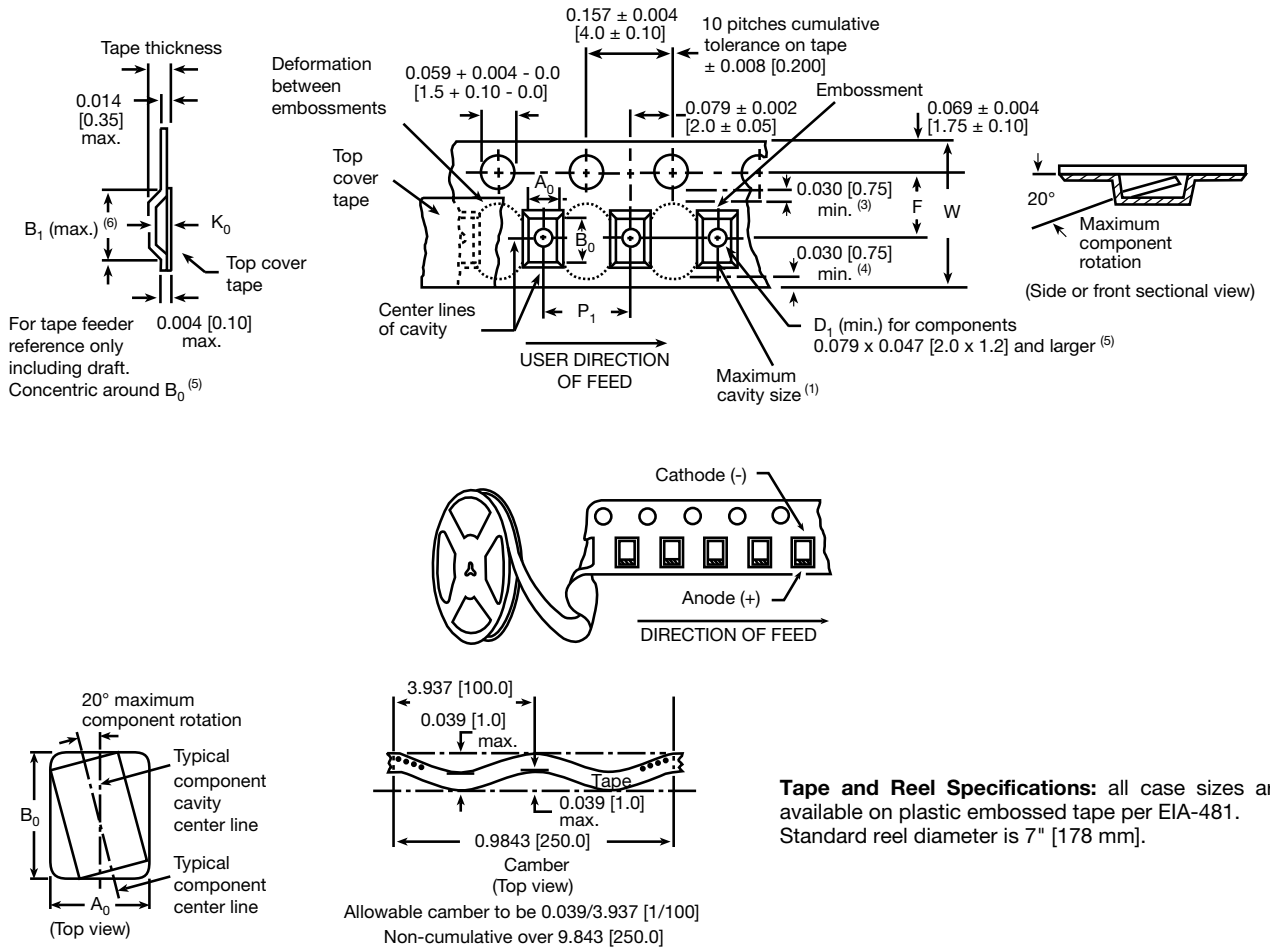

Tape and Reel Specifications: all case sizes are available on plastic embossed tape per EIA-481. Standard reel diameter is 7" [178 mm].

Notes

- Metric dimensions will govern. Dimensions in inches are rounded and for reference only.

(1) A_0, B_0, K_0, are determined by the maximum dimensions to the ends of the terminals extending from the component body and / or the body dimensions of the component. The clearance between the ends of the terminals or body of the component to the sides and depth of the cavity (A_0, B_0, K_0) must be within 0.002" (0.05 mm) minimum and 0.020" (0.50 mm) maximum. The clearance allowed must also prevent rotation of the component within the cavity of not more than 20°.

(2) Tape with components shall pass around radius “R” without damage. The minimum trailer length may require additional length to provide “R” minimum for 12 mm embossed tape for reels with hub diameters approaching N minimum.

(3) This dimension is the flat area from the edge of the sprocket hole to either outward deformation of the carrier tape between the embossed cavities or to the edge of the cavity whichever is less.

(4) This dimension is the flat area from the edge of the carrier tape opposite the sprocket holes to either the outward deformation of the carrier tape between the embossed cavity or to the edge of the cavity whichever is less.

(5) The embossed hole location shall be measured from the sprocket hole controlling the location of the embossment. Dimensions of embossment location shall be applied independent of each other.

(6) B_1 dimension is a reference dimension tape feeder clearance only.

For technical questions, contact: polytech@vishay.com
THIS DOCUMENT IS SUBJECT TO CHANGE WITHOUT NOTICE. THE PRODUCTS DESCRIBED HEREIN AND THIS DOCUMENT ARE SUBJECT TO SPECIFIC DISCLAIMERS, SET FORTH AT www.vishay.com/doc?91000

CARRIER TAPE DIMENSIONS in inches [millimeters]							
CASE CODE	**TAPE SIZE**	**B_1 (MAX.) (1)**	**D_1 (MIN.)**	**F**	**K_0 (MAX.)**	**P_1**	**W**
E1	TBD						
MM (2)	8 mm	0.075 [1.91]	0.02 [0.5]	0.138 [3.5]	0.043 [1.10]	0.157 [4.0]	0.315 [8.0]
M0	TBD						
M1	12 mm	0.32 [8.2]	0.059 [1.5]	0.217 ± 0.002 [5.5 ± 0.05]	0.094 [2.39]	0.315 ± 0.04 [8.0 ± 1.0]	0.472 + 0.012 / - 0.004 [12.0 + 0.3 / - 0.10]
W9	8 mm	0.126 [3.20]	0.030 [0.75]	0.138 [3.5]	0.045 [1.15]	0.157 [4.0]	0.315 [8.0]
W0	8 mm	0.126 [3.20]	0.030 [0.75]	0.138 [3.5]	0.045 [1.15]	0.157 [4.0]	0.315 [8.0]
A0	8 mm	-	0.02 [0.5]	0.138 [3.5]	0.049 [1.25]	0.157 [4.0]	0.315 [8.0]
AA	8 mm	0.154 [3.90]	0.039 [1.0]	0.138 [3.5]	0.079 [2.00]	0.157 [4.0]	0.315 [8.0]
B0	12 mm	0.181 [4.61]	0.059 [1.5]	0.217 [5.5]	0.049 [1.25]	0.157 [4.0]	0.315 [8.0]
BB	8 mm	0.157 [4.0]	0.039 [1.0]	0.138 [3.5]	0.087 [2.22]	0.157 [4.0]	0.315 [8.0]
EE	12 mm	0.32 [8.2]	0.059 [1.5]	0.217 ± 0.002 [5.5 ± 0.05]	0.175 [4.44]	0.315 ± 0.04 [8.0 ±1.0]	0.472 + 0.012 / - 0.004 [12.0 + 0.3 / - 0.10]

Notes

(1) For reference only.

(2) Standard packaging of MM case is with paper tape. Plastic tape is available per request.

PAPER TAPE AND REEL PACKAGING DIMENSIONS in inches [millimeters]

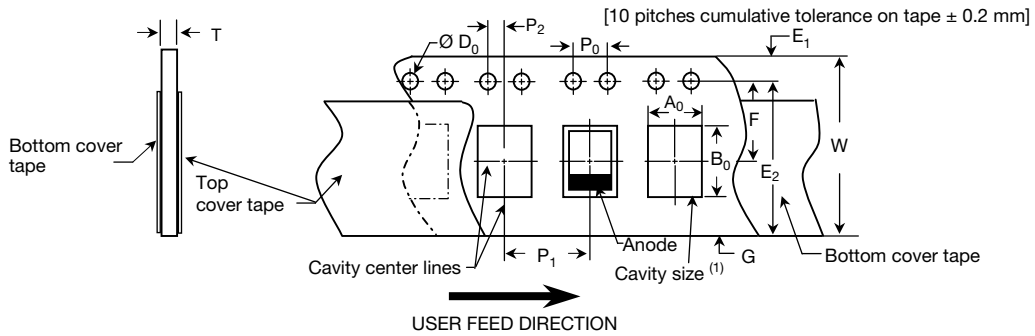

CASE SIZE	TAPE SIZE	A_0	B_0	D_0	P_0	P_1	P_2	E	F	W	T
MM	8 mm	0.041 ± 0.002 [1.05 ± 0.05]	0.071 ± 0.002 [1.8 ± 0.05]	0.06 ± 0.004 [1.5 ± 0.1]	0.157 ± 0.004 [4.0 ± 0.1]	0.157 ± 0.004 [4.0 ± 0.1]	0.079 ± 0.002 [2.0 ± 0.05]	0.069 ± 0.004 [1.75 ± 0.1]	0.0138 ± 0.002 [3.5 ± 0.05]	0.315 ± 0.008 [8.0 ± 0.2]	0.037 ± 0.002 [0.95 ± 0.05]

Note

(1) A_0, B_0 are determined by the maximum dimensions to the ends of the terminals extending from the component body and / or the body dimensions of the component. The clearance between the ends of the terminals or body of the component to the sides and depth of the cavity (A_0, B_0) must be within 0.002" (0.05 mm) minimum and 0.020" (0.50 mm) maximum. The clearance allowed must also prevent rotation of the component within the cavity of not more than 20°.

For technical questions, contact: polytech@vishay.com
THIS DOCUMENT IS SUBJECT TO CHANGE WITHOUT NOTICE. THE PRODUCTS DESCRIBED HEREIN AND THIS DOCUMENT ARE SUBJECT TO SPECIFIC DISCLAIMERS, SET FORTH AT www.vishay.com/doc?91000

PACKING AND STORAGE

Polymer capacitors meet moisture sensitivity level rating (MSL) of 3 as specified in IPC/JEDEC® J-STD-020 and are dry packaged in moisture barrier bags (MBB) per J-STD-033. Level 3 specifies a floor life (out of bag) of 168 hours at 30 °C maximum and 60 % relative humidity (RH). Unused capacitors should be re-sealed in the MBB with fresh desiccant. A moisture strip (humidity indicator card) is included in the bag to assure dryness. To remove excess moisture, capacitors can be dried at 40 °C (standard “dry box” conditions).

For detailed recommendations please refer to J-STD-033.

RECOMMENDED REFLOW PROFILES

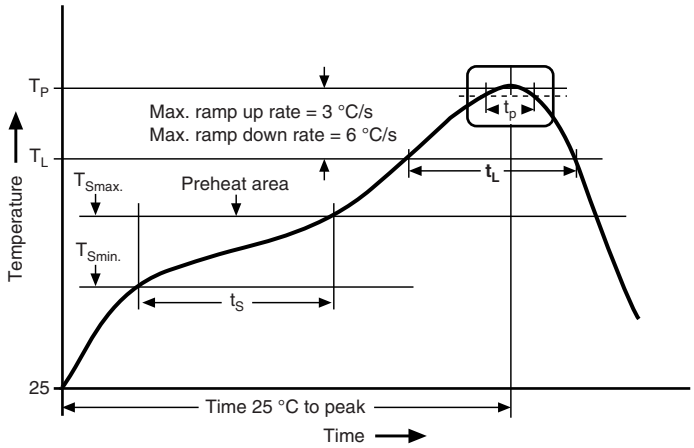

PROFILE FEATURE	SnPb EUTECTIC ASSEMBLY	LEAD (Pb)-FREE ASSEMBLY
PREHEAT AND SOAK		
Temperature min. ($T_{Smin.}$)	100 °C	150 °C
Temperature max. ($T_{Smax.}$)	150 °C	200 °C
Time (t_S) from ($T_{Smin.}$ to $T_{Smax.}$)	60 s to 120 s	60 s to 120 s
RAMP UP		
Ramp-up rate (T_L to T_p)	3 °C/s maximum	
Liquidus temperature (T_L)	183 °C	217 °C
Time (t_L) maintained above T_L	60 s to 150 s	
Peak package body temperature (T_p) max.	Depends on type and case - see table below	
Time (t_p) within 5 °C of the peak max. temperature	20 s	5 s
RAMP DOWN		
Ramp-down rate (T_p to T_L)	6 °C/s maximum	
Time from 25 °C to peak temperature	6 min maximum	8 min maximum

PEAK PACKAGE BODY TEMPERATURE (T_p) MAXIMUM

TYPE	CASE CODE	PEAK PACKAGE BODY TEMPERATURE (T_P) MAX.	
		SnPb EUTECTIC ASSEMBLY	LEAD (Pb)-FREE ASSEMBLY
T55	J, P, A, T, B, V, D	n/a	260 °C
T52	E1, M1		260 °C
T58	MM, M0, W9, W0, A0, AA, B0, BB		260 °C
T59	EE		250 °C
T54	EE	220 °C	250 °C

Notes

- T52, T55, and T58 capacitors are process sensitive.
  PSL classification to JEDEC J-STD-075: R4G
- T54 capacitors with 100 % tin termination and T59 capacitors are process sensitive.
  PSL classification to JEDEC J-STD-075: R6G

For technical questions, contact: polytech@vishay.com
THIS DOCUMENT IS SUBJECT TO CHANGE WITHOUT NOTICE. THE PRODUCTS DESCRIBED HEREIN AND THIS DOCUMENT ARE SUBJECT TO SPECIFIC DISCLAIMERS, SET FORTH AT www.vishay.com/doc?91000

MOLDED CAPACITORS, T55 TYPE

PAD DIMENSIONS in millimeters

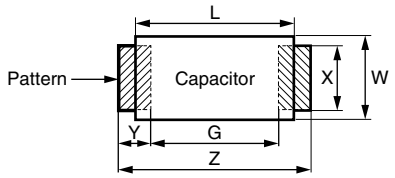

CASE / DIMENSIONS	CAPACITOR SIZE		PAD DIMENSIONS			
	L	W	G (max.)	Z (min.)	X (min.)	Y (Ref.)
J	1.6	0.8	0.7	2.5	1.0	0.9
P	2.0	1.25	0.5	2.6	1.2	1.05
A	3.2	1.6	1.1	3.8	1.5	1.35
T / B	3.5	2.8	1.4	4.1	2.7	1.35
V / D	7.3	4.3	4.1	8.2	2.9	2.05

LEADFRAMELESS MOLDED CAPACITORS, ALL TYPES

PAD DIMENSIONS in inches [millimeters]

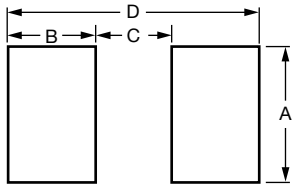

TYPE	CASE CODE	A (MIN.)	B (NOM.)	C (NOM.)	D (NOM.)
T52	E1	0.209 [5.30]	0.098 [2.5]	0.169 [4.3]	0.366 [9.3]
	M1	0.276 [7.00]	0.098 [2.5]	0.169 [4.3]	0.366 [9.3]
T58	MM / M0	0.039 [1.00]	0.028 [0.70]	0.024 [0.60]	0.080 [2.00]
	W0 / W9	0.059 [1.50]	0.031 [0.80]	0.039 [1.00]	0.102 [2.60]
	AA / A0	0.071 [1.80]	0.067 [1.70]	0.053 [1.35]	0.187 [4.75]
	BB / B0	0.118 [3.00]	0.071 [1.80]	0.065 [1.65]	0.207 [5.25]
T59 / T54	EE	0.209 [5.30]	0.098 [2.5]	0.169 [4.3]	0.366 [9.3]

THIS DOCUMENT IS SUBJECT TO CHANGE WITHOUT NOTICE. THE PRODUCTS DESCRIBED HEREIN AND THIS DOCUMENT ARE SUBJECT TO SPECIFIC DISCLAIMERS, SET FORTH AT www.vishay.com/doc?91000

GUIDE TO APPLICATION

1. **AC Ripple Current:** the maximum allowable ripple current shall be determined from the formula:

$$I_{RMS} = \sqrt{\frac{P}{R_{ESR}}}$$

where,

P = power dissipation in W at +45 °C as given in the tables in the product datasheets.

R_{ESR} = the capacitor equivalent series resistance at the specified frequency.

2. **AC Ripple Voltage:** the maximum allowable ripple voltage shall be determined from the formula:

$$V_{RMS} = Z\sqrt{\frac{P}{R_{ESR}}}$$

or, from the formula:

$$V_{RMS} = I_{RMS} \times Z$$

where,

P = power dissipation in W at +45 °C as given in the tables in the product datasheets.

R_{ESR} = The capacitor equivalent series resistance at the specified frequency.

Z = The capacitor impedance at the specified frequency.

2.1 The tantalum capacitors must be used in such a condition that the sum of the working voltage and ripple voltage peak values does not exceed the rated voltage as shown in figure below.

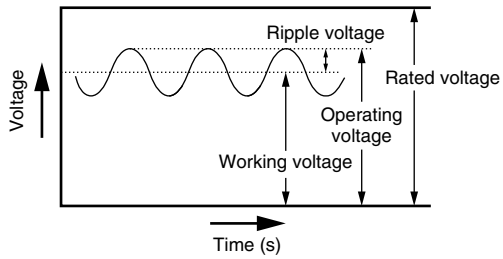

3. **Temperature Derating:** power dissipation is affected by the heat sinking capability of the mounting surface. If these capacitors are to be operated at temperatures above +45 °C, the permissible ripple current (or voltage) shall be calculated using the derating coefficient as shown in the table below:

MAXIMUM RIPPLE CURRENT TEMPERATURE DERATING FACTOR	
≤ 45 °C	1.0
55 °C	0.8
85 °C	0.6
105 °C	0.4

4. **Reverse Voltage:** these capacitors are capable of withstanding peak voltages in the reverse direction equal to 10 % of the DC rating at +25 °C, 5 % of the DC rating at +25 °C, 5 % of the DC rating at +85 °C, and 1 % of the DC rating at +105 °C.

5. **Mounting Precautions:**

5.1 **Limit Pressure on Capacitor Installation with Mounter:** pressure must not exceed 4.9 N with a tool end diameter of 1.5 mm when applied to the capacitors using an absorber, centering tweezers, or similar (maximum permitted pressurization time: 5 s). An excessively low absorber setting position would result in not only the application of undue force to the capacitors but capacitor and other component scattering, circuit board wiring breakage, and / or cracking as well, particularly when the capacitors are mounted together with other chips having a height of 1 mm or less.

5.2 **Flux Selection**

5.2.1 Select a flux that contains a minimum of chlorine and amine.

5.2.2 After flux use, the chlorine and amine in the flux remain must be removed.

5.3 **Cleaning After Mounting:** the following solvents are usable when cleaning the capacitors after mounting. Never use a highly active solvent.

- Halogen organic solvent (HCFC225, etc.)
- Alcoholic solvent (IPA, ethanol, etc.)
- Petroleum solvent, alkali saponifying agent, water, etc.

Circuit board cleaning must be conducted at a temperature of not higher than 50 °C and for an immersion time of not longer than 30 minutes. When an ultrasonic cleaning method is used, cleaning must be conducted at a frequency of 48 kHz or lower, at an vibrator output of 0.02 W/cm^3, at a temperature of not higher than 40 °C, and for a time of 5 minutes or shorter.

Notes

- Care must be exercised in cleaning process so that the mounted capacitor will not come into contact with any cleaned object or the like or will not get rubbed by a stiff brush or similar. If such precautions are not taken particularly when the ultrasonic cleaning method is employed, terminal breakage may occur.
- When performing ultrasonic cleaning under conditions other than stated above, conduct adequate advance checkout.

THIS DOCUMENT IS SUBJECT TO CHANGE WITHOUT NOTICE. THE PRODUCTS DESCRIBED HEREIN AND THIS DOCUMENT ARE SUBJECT TO SPECIFIC DISCLAIMERS, SET FORTH AT www.vishay.com/doc?91000

Disclaimer

ALL PRODUCT, PRODUCT SPECIFICATIONS AND DATA ARE SUBJECT TO CHANGE WITHOUT NOTICE TO IMPROVE RELIABILITY, FUNCTION OR DESIGN OR OTHERWISE.

Vishay Intertechnology, Inc., its affiliates, agents, and employees, and all persons acting on its or their behalf (collectively, "Vishay"), disclaim any and all liability for any errors, inaccuracies or incompleteness contained in any datasheet or in any other disclosure relating to any product.

Vishay makes no warranty, representation or guarantee regarding the suitability of the products for any particular purpose or the continuing production of any product. To the maximum extent permitted by applicable law, Vishay disclaims (i) any and all liability arising out of the application or use of any product, (ii) any and all liability, including without limitation special, consequential or incidental damages, and (iii) any and all implied warranties, including warranties of fitness for particular purpose, non-infringement and merchantability.

Statements regarding the suitability of products for certain types of applications are based on Vishay's knowledge of typical requirements that are often placed on Vishay products in generic applications. Such statements are not binding statements about the suitability of products for a particular application. It is the customer's responsibility to validate that a particular product with the properties described in the product specification is suitable for use in a particular application. Parameters provided in datasheets and/or specifications may vary in different applications and performance may vary over time. All operating parameters, including typical parameters, must be validated for each customer application by the customer's technical experts. Product specifications do not expand or otherwise modify Vishay's terms and conditions of purchase, including but not limited to the warranty expressed therein.

Except as expressly indicated in writing, Vishay products are not designed for use in medical, life-saving, or life-sustaining applications or for any other application in which the failure of the Vishay product could result in personal injury or death. Customers using or selling Vishay products not expressly indicated for use in such applications do so at their own risk. Please contact authorized Vishay personnel to obtain written terms and conditions regarding products designed for such applications.

No license, express or implied, by estoppel or otherwise, to any intellectual property rights is granted by this document or by any conduct of Vishay. Product names and markings noted herein may be trademarks of their respective owners.

Material Category Policy

Vishay Intertechnology, Inc. hereby certifies that all its products that are identified as RoHS-Compliant fulfill the definitions and restrictions defined under Directive 2011/65/EU of The European Parliament and of the Council of June 8, 2011 on the restriction of the use of certain hazardous substances in electrical and electronic equipment (EEE) - recast, unless otherwise specified as non-compliant.

Please note that some Vishay documentation may still make reference to RoHS Directive 2002/95/EC. We confirm that all the products identified as being compliant to Directive 2002/95/EC conform to Directive 2011/65/EU.

Vishay Intertechnology, Inc. hereby certifies that all its products that are identified as Halogen-Free follow Halogen-Free requirements as per JEDEC JS709A standards. Please note that some Vishay documentation may still make reference to the IEC 61249-2-21 definition. We confirm that all the products identified as being compliant to IEC 61249-2-21 conform to JEDEC JS709A standards.